Voltage Monitoring Relay

DVS-1000

DELAB

features

- True RMS Measurement
- Over Voltage Monitoring
- Under Voltage Monitoring
- Phase Asymmetry Monitoring
- Phase Failure Monitoring
- Phase Sequence Monitoring
- Trip LED Indicator
- Adjustable Over / Under Voltage Settings
- Adjustable Trip Delay
- Auto-reset
- Din-railed Mount

technical data

Measurement	True RMS Ampere
Rated voltage supply	AC220V, AC230V, AC240V (3 phase 4 wire) AC380V, AC400V, AC415V (3 phase 3 wire)
Rated frequency	50 ~ 60 Hz
U > threshold range	(1.05 ~ 1.30)*Ue
U < threshold range	(0.70 ~ 0.95)*Ue
Asymmetry threshold	10%
Voltage hysteresis	3 phase 4 wire: 3.5V ; 3 phase 3 wire: 6V
Trip delay	0.1 ~ 10 sec
Asymmetry hysteresis	25% Asymmetry setting value
Phase failure sensitivity	0.5*Ue
Voltage measurement error	<1% (over the whole range)
Time delay error	±10%, + 0.1sec
Knob setting accuracy	1% of the full scale
Rated insulation voltage	420V
Rated fuse rating	RT36-00 5A
Output Contact	1 C/O contact
Pollution degree	3
Electrical life	10^5
Mechanical life	10^6
Conventional thermal current	5A
Usage category	AC-15
Contact capacity	Ue/Ie:240V/1.5A, 415V/0.95A
Wiring size	$0.5mm^2$ ~ $2.5mm^2$
Tightening torque	0.5Nm
Altitude	≤ 2000m
Operating temp.	-5° C ~ +40° C
Relativity humidity	≤50% at 40° C (without condensation)
Storage temp.	-20° C ~ +50° C
Enclosure Protection	IP20
Weight	~ 190g
Mounting	DIN Rail mount or Screw mount
Standard	EN/IEC 60947-5-1

parameter setting

Over Voltage Setting :
250 Vac~310 Vac +1%, (3 phase 4 wire)
430 Vac~530 Vac +1%, (3 phase 3 wire)

Under Voltage Setting :
170 Vac~230 Vac +1%, (3 phase 4 wire)
290 Vac~390 Vac +1%, (3 phase 3 wire)

Delay Time Setting :
0.1sec~10.0 sec +1%, (Over/Under Voltage)
2.0 s Fixed, (asymmetry trip)
< 1.0 sec, (phase failure/phase seq. trip)

monitoring characteristics

Over Voltage Indication :
LED "U>" lit up, LED "Normal" unlit.

Under Voltage indication :
LED "U<" lit up, LED "Normal" unlit.

Asymmetry Indication :
Both LED "U>"& LED "U<" will flash,
LED "Normal" unlit.

Phase Failure Indication :
Both LED "U>"& LED "U<" will lit up (Phs.Fail.),
LED "Normal" unlit.

Wrong Phase Sequence Indication :
LED "Phs.Seq" will lit up, LED "Normal" unlit.

auto-reset activation

Over Voltage :
< 6Vac of Ue> (3 phase 3 wire)
< 3.5Vac of Ue> (3 phase 4 wire)

Under Voltage :
> 6Vac of Ue< (3 phase 3 wire)
> 3.5Vac of Ue< (3 phase 4 wire)

Phase Asymmetry :
Phase voltage difference must not exceed 10%

**Specification subject to change without prior notification (please visit www.delab.com.my for latest specification)*

panel description

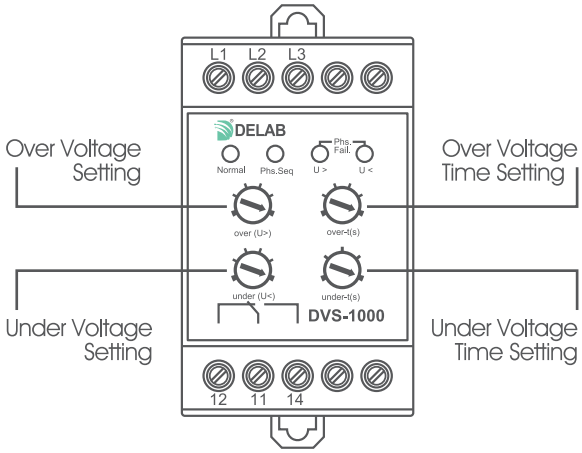

casing dimension

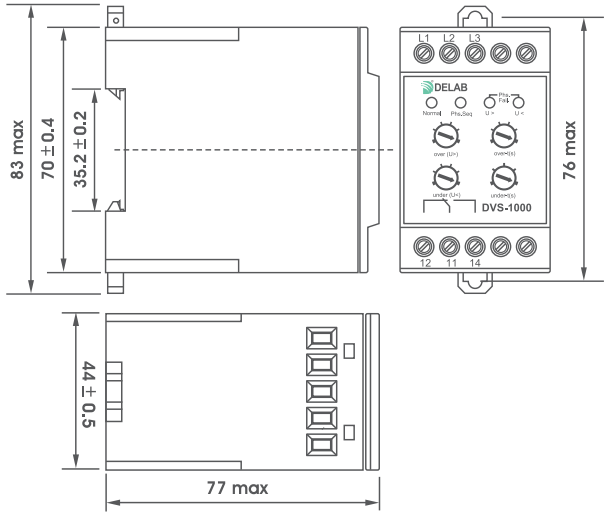

wiring diagram

3 phase 4 wire

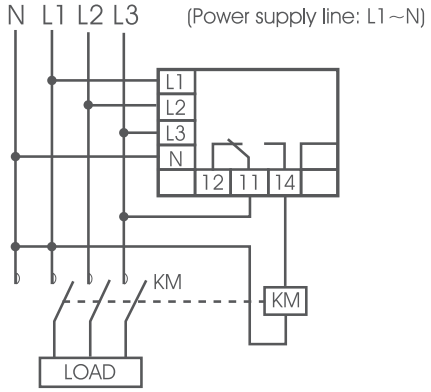

3 phase 3 wire

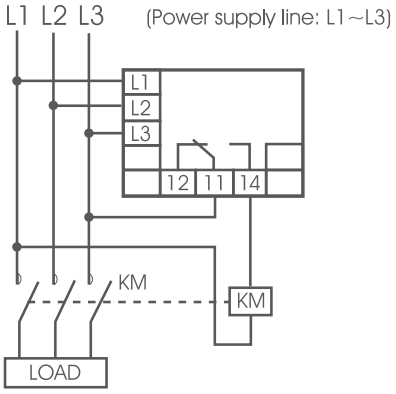

function diagram

Phase asymmetry, phase failure, phase sequence monitoring

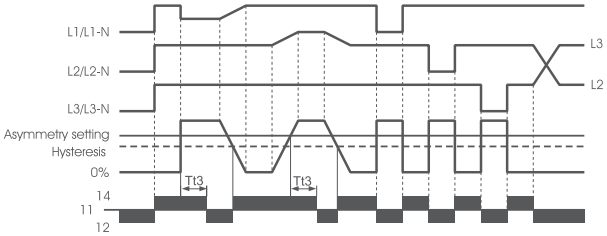

Overvoltage and undervoltage monitoring

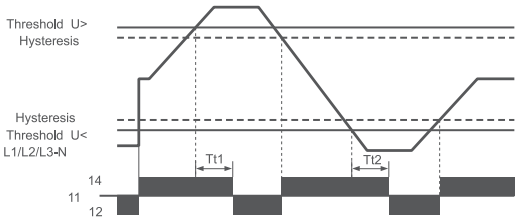

Tt1: Overvoltage time delay
Tt2: Undervoltage time delay
Tt3: Asymmetry time delay

ordering information

Model	Description
DVS-1000-M220	AC 220V (3 phase 4 wire)
DVS-1000-M240	AC 240V (3 phase 4 wire)
DVS-1000-M380	AC 380V (3 phase 3 wire)
DVS-1000-M415	AC 415V (3 phase 3 wire)

Note: All measurement in mm.

Digital

Voltage Monitoring Relay

DVS-1000E

DELAB

features

- True RMS Measurement
- Over Voltage Monitoring
- Under Voltage Monitoring
- Phase Failure Monitoring
- Trip LED Indicator
- Adjustable Over / Under Voltage Settings
- Adjustable Trip Delay
- Auto-reset
- Din-railed Mount

technical data

Models	(3P3W)	(3P4W)
Measurement	True RMS Monitoring	
Rated voltage supply	AC 200~500V / 50Hz	AC 123~300V / 50Hz
U > setting value	(105% ~125%) x Un	
U < setting value	(70% ~95%) x Un	
U > trip delay	0.1~10 sec	
U < trip value	0.1~10 sec	
Voltage hysteresis	6V	5V
Trip time for incorrect phase sequence & phase failure	⩽ 0.2 sec	
Voltage measurement error	⩽ 1%	
Delay error	± 5%, +0.1 sec	
Knob setting error	1% x scale value	
Rated insulation voltage	480V	
Output contact	1C / O	
Current rating	8A / 250V AC1	
Trip delay for phase failure	⩽ 0.2 sec	
Mechanical life	10^6	
Electrical life	10^5	
Protection degree	IP20	
Pollution degree	3	
Altitude	⩽ 2000m	
Operating temperature	-20° ~ +55° C	
Relativity humidity	⩽50% at 40° C (without condensation)	
Storage temp.	-30° C ~ +70° C	
Wire size	0.5 ~ 2.5 mm^2	
Torque	0.5Nm	
Weight	~ 95g	
Mounting	DIN Rail mount / TH35 Rail (EN60715)	
Standard	EN/IEC 60947-5-1	

parameter setting

Over Voltage Setting :
250 Vac~310 Vac +1%, (3 phase 4 wire)
430 Vac~530 Vac +1%, (3 phase 3 wire)

Under Voltage Setting :
170 Vac~230 Vac +1%, (3 phase 4 wire)
290 Vac~390 Vac +1%, (3 phase 3 wire)

Delay Time Setting :
0.1sec~10.0 sec +1%, (Over/Under Voltage)
2.0 s Fixed, (asymmetry trip)
< 1.0 sec, (phase failure/phase seq. trip)

monitoring characteristics

Over Voltage Indication :
LED "U>" lit up, LED "Normal" unlit.

Under Voltage indication :
LED "U<" lit up, LED "Normal" unlit.

Phase Failure Indication :
Both LED "U>"& LED "U<" will lit up (Phs.Fail.), LED "Normal" unlit.

auto-reset activation

Over Voltage :
< 6Vac of Ue> (3 phase 3 wire)
< 3.5Vac of Ue> (3 phase 4 wire)

Under Voltage :
> 6Vac of Ue< (3 phase 3 wire)
> 3.5Vac of Ue< (3 phase 4 wire)

**Specification subject to change without prior notification (please visit www.delab.com.my for latest specification)*

panel description

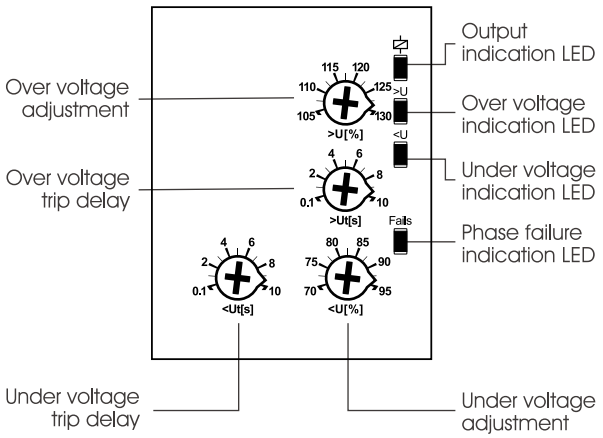

casing dimension

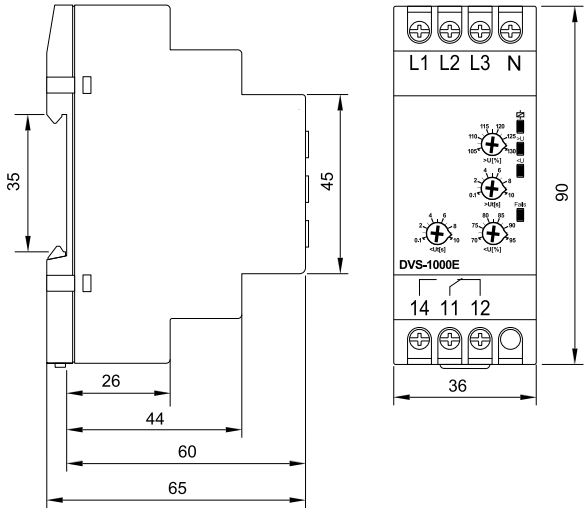

wiring diagram

3 phase 3 wire

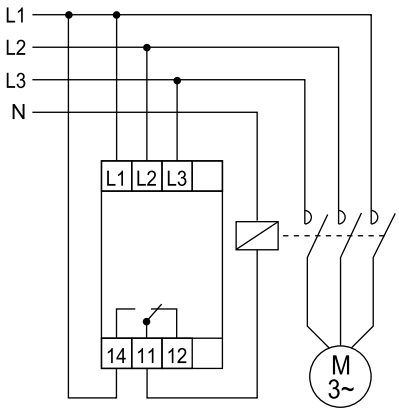

3 phase 4 wire

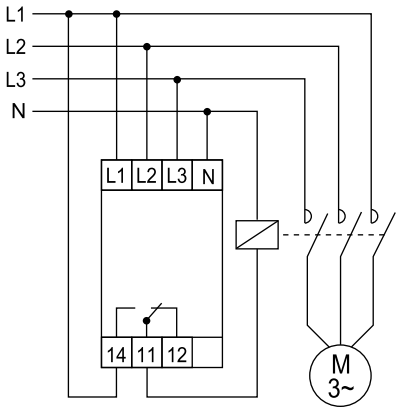

function diagram

Phase failure and phase sequence monitoring

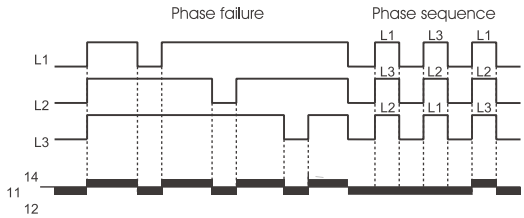

Overvoltage and undervoltage monitoring

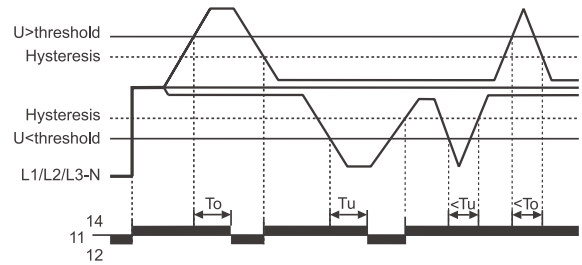

To: Overvoltage trip delay
Tu: Undervoltage trip delay

ordering information

Model	Description
DVS -1000E - M220	AC 220V (3 phase 4 wire)
DVS -1000E - M240	AC 240V (3 phase 4 wire)
DVS -1000E - M380	AC 380V (3 phase 3 wire)
DVS -1000E - M415	AC 415V (3 phase 3 wire)

Note: All measurement in mm.

Voltage Monitoring Relay

DVS-2000

DELAB

features

- True RMS Measurement
- Over / Under Voltage Monitoring
- Phase Asymmetry Monitoring
- Phase Sequence Monitoring
- Phase Failure Monitoring
- Adjustable Over / Under Voltage Setting
- Adjustable Trip Delay
- Real Time L-L Voltage & Fault Display
- LCD Backlit Display
- Test Trip Function
- Selectable Auto / Manual Reset Function
- Adjustable Start / Reset Time Delay
- Din-railed Mount

technical data

Measurement	True RMS Ampere
Rated voltage supply	M240 (3 phase 4 wire) : AC125V~AC300V M415 (3 phase 3 wire) : AC200V~AC500V
Rated frequency	50 ~ 60 Hz
Voltage hysteresis	M240 (3 phase 4 wire) : 5V M415 (3 phase 3 wire) : 6V
Time for phase failure & incorrect phase sequence	⩽ 0.2 sec
Voltage measurement error	<1% (over the whole range)
Time delay error	± 1%, + 0.1sec
Rated insulation voltage	415V
Rated fuse rating	RT36-00 5A
Pollution degree	3
Electrical life	10^5
Mechanical life	10^6
Contact capacity	Lth:5A ; AC-15: AC240V/1.5A, AC415V/0.95A
Altitude	⩽ 2000m
Operating temp.	-5° C ~ +40° C
Relativity humidity	⩽50% at 40° C (without condensation)
Storage temp.	-25° C ~ +50° C
Enclosure Protection	IP20
Weight	~ 95g
Mounting	DIN Rail mount
Standard	EN/IEC 60947-5-1

parameter setting

Over Voltage:
Step adjustment : 1V
OFF or 221V~300V (3 phase 4 wire)
OFF or 381V~500V (3 phase 3 wire)

Under Voltage:
Step adjustment :1V
OFF or 150V~219V (3 phase 4 wire)
OFF or 260V~379V (3 phase 3 wire)

Delay Time:
Step adjustment : 0.1 sec
(Over / Under Voltage / Asymmetry)
0.1~20 sec

Asymmetry:
OFF or 5~20%

Phase sequence:
ON or OFF

Start/Reset delay:
0.3~30 sec

Auto-reset:
ON or OFF

**Specification subject to change without prior notification (please visit www.delab.com.my for latest specification)*

panel description

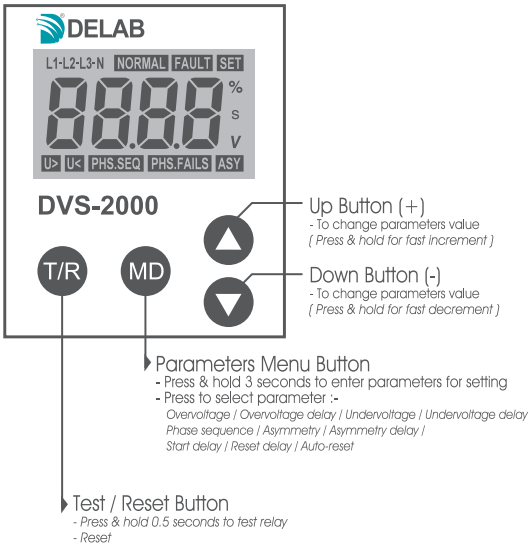

casing dimension

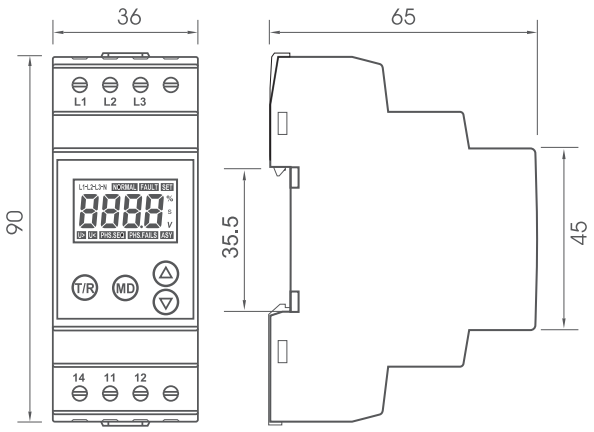

wiring diagram

3 phase 3 wire

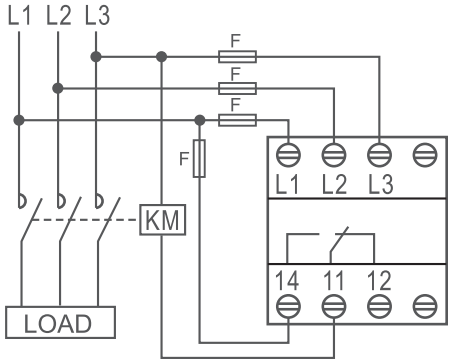

3 phase 4 wire

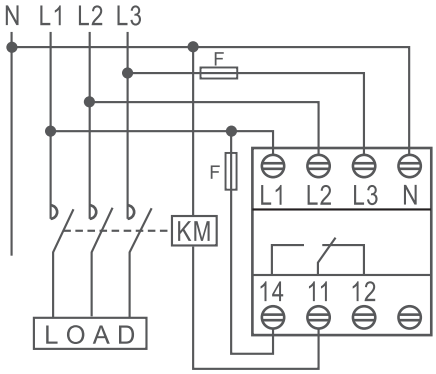

function diagram

Phase asymmetry monitoring

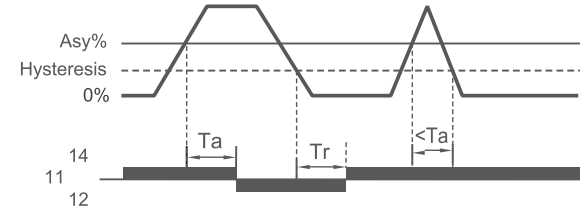

Phase failure and phase sequence monitoring

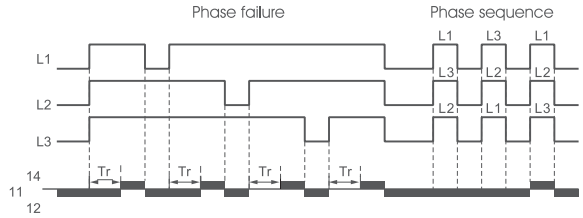

Overvoltage and undervoltage monitoring

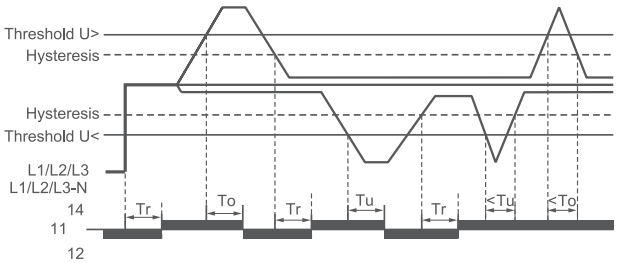

Ta: Asymmetry time delay
To: Overvoltage time delay
Tr : Start / Reset time delay
Tu: Undervoltage time delay

ordering information

Model	Description
DVS-2000-M240	AC 125V~AC300V ±10% (3 phase 4 wire)
DVS-2000-M415	AC 200V~AC500V ±10% (3 phase 3 wire)

Note: All measurement in mm.